Tel +1 (717) 767-6511
Fax +1 (717) 764-0839
www.redlion.net

Bulletin No. CSOUT-A
Drawing No. LP0663
Released 4/07

MODEL CSOUT - MODULAR CONTROLLER SERIES 4-CHANNEL ANALOG OUTPUT MODULE

- *HIGH DENSITY ANALOG OUTPUT MODULE FOR THE MODULAR CONTROLLER SERIES*
- *AVAILABLE OUTPUTS INCLUDE 0 to 5 VDC, 0 to 10 VDC, ±10 VDC, AND 0/4-20 mA DC*
- *OUTPUTS ARE ISOLATED FROM EACH OTHER AND FROM THE BACKPLANE*
- *OUTPUTS ARE SOFTWARE CONFIGURED AND FULLY SCALABLE*
- *AUTO ADDRESSING MINIMIZES CONFIGURATION TIME*
- *CAN BE USED IN CONJUNCTION WITH ANY CS SERIES MODULES*

GENERAL DESCRIPTION

The model CSOUT is an analog output module designed for use with the Modular Controller Series. The module provides four isolated outputs that are independently programmable for output ranges of 0-5V, 0-10V, +/-10V, 0-20mA, or 4-20mA. Internal scaling is provided to accommodate virtually any application.

The modules connect and communicate via a backplane connection to the CSMSTR Modular Controller Series Master. The CSMSTR, equipped with serial ports as well as an Ethernet port, allows the system to share data with PCs, PLCs, and SCADA systems. The Master supports up to 16 CS Series modules (refer to the "Power" specifications).

Internal power management circuits allow the modules to be replaced while power is applied, which reduces downtime. All configuration information is stored locally within each module, as well as in the Master, so replacement modules do not need to be configured.

The Modular Controller Series' high density packaging and DIN rail mounting saves time and panel space. The backplane connection provides power and communication to the module and snaps easily onto standard top hat (T) profile DIN rail.

DIMENSIONS In inches (mm)

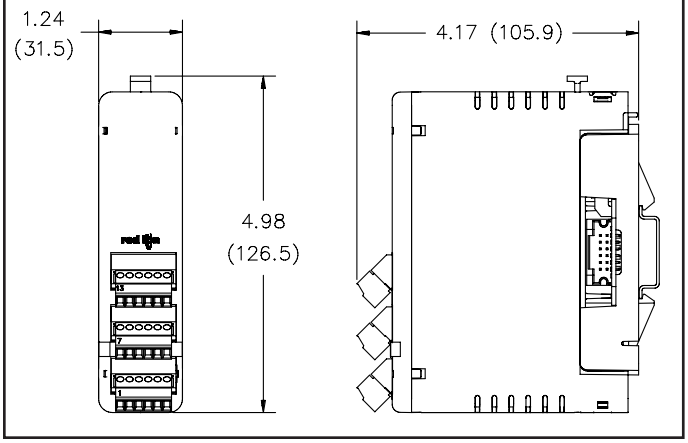

CONFIGURATION

The Modular Controller Series is configured with Windows® compatible Crimson™ software. The software is an easy to use, graphical interface that provides a means of communication configuration, as well as commissioning and calibration of new systems.

SAFETY SUMMARY

All safety related regulations, local codes and instructions that appear in the manual or on equipment must be observed to ensure personal safety and to prevent damage to either the instrument or equipment connected to it. If equipment is used in a manner not specified by the manufacturer, the protection provided by the equipment may be impaired.

Do not use the module to directly command motors, valves, or other actuators not equipped with safeguards. To do so can be potentially harmful to persons or equipment in the event of a fault to the module.

CAUTION: Risk of Danger. Read complete instructions prior to installation and operation of the unit.

CAUTION: Risk of electric shock.

SPECIFICATIONS

1. **POWER**: Derived from system backplane. (CSOUT draws 180 mA max. load on power input of MASTER). Modules may be hot-swapped (replaced while powered up).
2. **LEDs**:
   STS - Status LED shows module condition.
   ALM - Alarm LED is lit when an internal alarm condition exists.
3. **MEMORY**: Non-volatile memory retains all programmable parameters. MASTER also stores the parameters in order to reprogram modules that are replaced.
4. **COMMUNICATIONS**: Provided by the CS Master
5. **OUTPUTS**:
   Channels: 4 independent outputs
   Response Time: 25 msec max. to within 99% of final value
   Output Range: software selectable

OUTPUT RANGE	ACCURACY * 18 to 28 °C 10 to 75% RH	ACCURACY * 0 to 50 °C 0 to 85% RH	COMPLIANCE	RESOLUTION
0 to 5 VDC	0.2% of span	0.4% of span	10K Ω min.	1/30,000
0 to 10 VDC	0.1% of span	0.2% of span	10K Ω min.	1/60,000
-10 to +10 VDC	0.1% of span	0.2% of span	10K Ω min.	1/60,000
0 to 20 mA	0.1% of span	0.2% of span	500 Ω max.	1/60,000
4 to 20 mA	0.1% of span	0.2% of span	500 Ω max.	1/48,000

   * The accuracy is specified after 20 minutes warmup; in a non-condensing environment; and includes linearity errors.
6. **ISOLATION LEVEL**: The outputs are isolated from each other, and are isolated from the power supply. 500 V @ 50/60 Hz for 1 minute between any of the outputs and the CS Master power supply input.
7. **ENVIRONMENTAL CONDITIONS**:
   Operating Temperature Range: 0 to +50°C
   Storage Temperature Range: -40 to +85°C
   Operating and Storage Humidity: 85% max relative humidity, non-condensing, from 0 to +50°C
   Vibration According to IEC 68-2-6: 10 to 150 Hz, 0.075 mm amplitude in X, Y, Z direction 1 g.
   Shock According to IEC 68-2-27: Operational 25 g, 11 msec in 3 directions.
   Altitude: Up to 2000 meters
8. **CERTIFICATIONS AND COMPLIANCES**:
   SAFETY
   UL Listed, File # E302106, UL508, CSA C22.2 No. 14-M05 LISTED by Und. Lab. Inc. to U.S. and Canadian safety standards
   IEC 61010-1, EN 61010-1: Safety requirements for electrical equipment for measurement, control, and laboratory use, Part 1.
   ELECTROMAGNETIC COMPATIBILITY
   Emissions and Immunity to EN 61326: Electrical Equipment for Measurement, Control and Laboratory use.

Immunity:		
Electrostatic discharge	EN 61000-4-2	Criterion B 4 kV contact discharge 8 kV air discharge
Electromagnetic RF fields	EN 61000-4-3	Criterion A 10 V/m
Fast transients (burst)	EN 61000-4-4	Criterion A 2 kV power 1 kV signal
Surge	EN 61000-4-5	Criterion A 1 kV L-L, 2 kV L&N-E power
RF conducted interference	EN 61000-4-6	Criterion A 3 V/rms
Emissions:		
Emissions	EN 55011	Class A

   Notes:
   1. Criterion A: Normal operation within specified limits.
   2. Criterion B: Temporary loss of performance from which the unit self-recovers.
   3. Power supplied from back plane via Master Module.
9. **CONSTRUCTION**: Case body is burgundy high impact plastic. Installation Category I, Pollution Degree 2.
10. **CONNECTIONS**: Removable wire clamp screw terminal blocks.
    Wire Gage: 28-16 AWG terminal gage wire
    Torque: 1.96-2.23 inch/lbs (0.22-0.25 N-m)
11. **MOUNTING**: Snaps on to standard DIN style top hat (T) profile mounting rails according to EN50022 -35 x 7.5 and -35 x 15.
12. **WEIGHT**: 7 oz (198.4 g)

BLOCK DIAGRAM

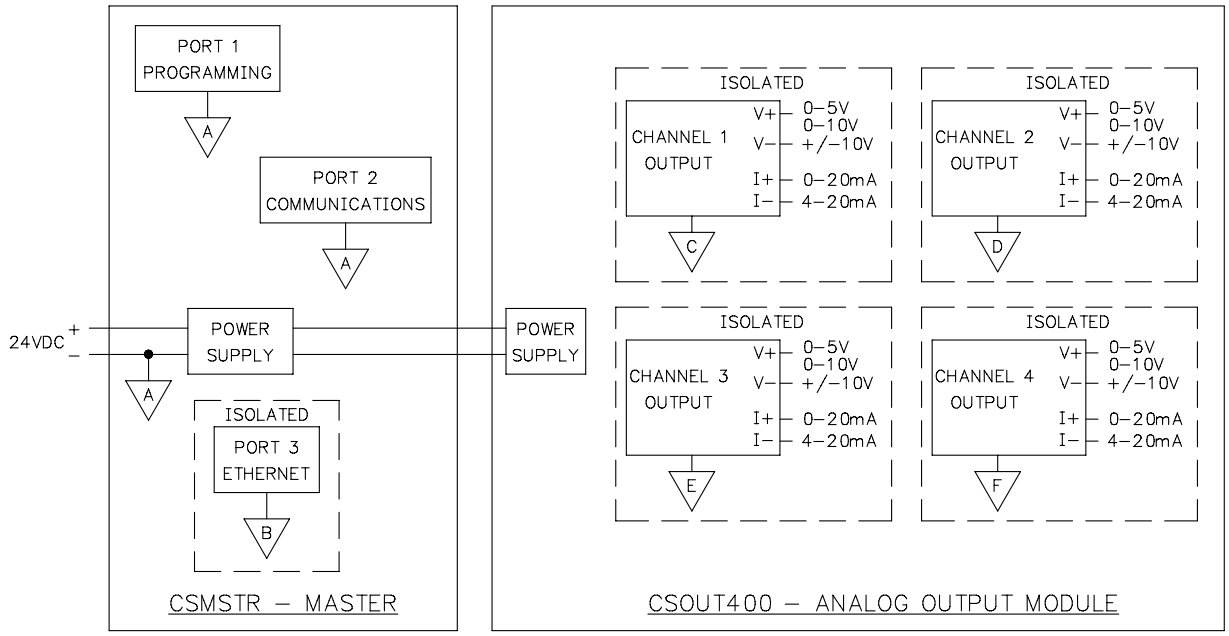

EMC INSTALLATION GUIDELINES

Although Red Lion Controls Products are designed with a high degree of immunity to Electromagnetic Interference (EMI), proper installation and wiring methods must be followed to ensure compatibility in each application. The type of electrical noise, source or coupling method into a unit may be different for various installations. Cable length, routing, and shield termination are very important and can mean the difference between a successful or troublesome installation. Listed are some EMI guidelines for a successful installation in an industrial environment.

1. A unit should be mounted in a metal enclosure, which is properly connected to protective earth.
   a. The mounting clip that connects to the DIN rail should have the DIN rail connected to protective earth.
2. Use shielded (screened) cables for all Signal and Control inputs. The shield (screen) pigtail connection should be made as short as possible. The connection point for the shield depends somewhat upon the application. Listed below are the recommended methods of connecting the shield, in order of their effectiveness.
   a. Connect the shield to earth ground (protective earth) at one end where the unit is mounted.
   b. Connect the shield to earth ground at both ends of the cable, usually when the noise source frequency is over 1 MHz.
   c. Connect the shield to common of the module and leave the other end of the shield unconnected and insulated from earth ground.
3. Never run Signal or Control cables in the same conduit or raceway with AC power lines, conductors, feeding motors, solenoids, SCR controls, and heaters, etc. The cables should be run through metal conduit that is properly grounded. This is especially useful in applications where cable runs are long and portable two-way radios are used in close proximity or if the installation is near a commercial radio transmitter. Also, Signal or Control cables within an enclosure should be routed as far away as possible from contactors, control relays, transformers, and other noisy components.
4. Long cable runs are more susceptible to EMI pickup than short cable runs. Therefore, keep cable runs as short as possible.
5. In extremely high EMI environments, the use of external EMI suppression devices such as Ferrite Suppression Cores for signal and control cables is effective. The following EMI suppression devices (or equivalent) are recommended:
   Fair-Rite part number 0443167251 (RLC part number FCOR0000)
   TDK part number ZCAT3035-1330A
   Steward part number 28B2029-0A0
6. To protect relay contacts that control inductive loads and to minimize radiated and conducted noise (EMI), some type of contact protection network is normally installed across the load, the contacts or both. The most effective location is across the load.
   a. Using a snubber, which is a resistor-capacitor (RC) network or metal oxide varistor (MOV) across an AC inductive load is very effective at reducing EMI and increasing relay contact life.
   b. If a DC inductive load (such as a DC relay coil) is controlled by a transistor switch, care must be taken not to exceed the breakdown voltage of the transistor when the load is switched. One of the most effective ways is to place a diode across the inductive load. Most RLC products with solid state outputs have internal zener diode protection. However external diode protection at the load is always a good design practice to limit EMI. Although the use of a snubber or varistor could be used.
      RLC part numbers: Snubber SNUB0000
      Varistor ILS11500 or ILS23000
   Note: Reference manufacturer's instructions when installing any EMI suppression device.
7. Also, care should be taken when connecting input and output devices to the instrument. When a separate input and output common is provided, they should not be mixed. Therefore a sensor common should NOT be connected to an output common. This would cause EMI on the sensitive input common, which could effect the instrument's operation.

Visit RLC's web site at www.redlion.net for more information on EMI guidelines, Safety and CE issues as they relate to Red Lion Controls products.

HARDWARE INSTALLATION

SEPARATE BASE FROM MODULE

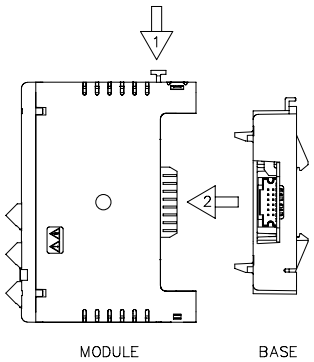

ATTACH THE MODULE BASE TO THE DIN RAIL

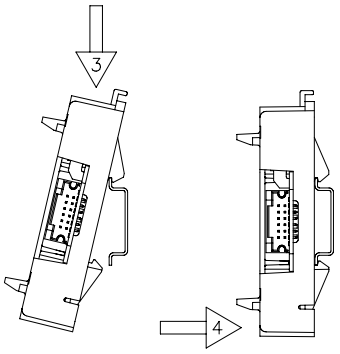

ATTACH MODULE TO BASE

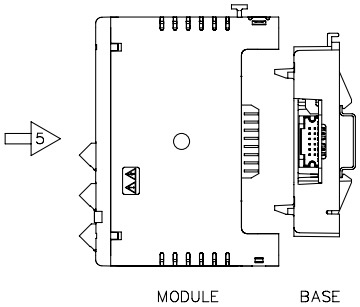

WIRING

WIRING CONNECTIONS

All conductors should meet voltage and current ratings for each terminal. Also, cabling should conform to appropriate standards of good installation, local codes and regulations. When wiring the module, use the numbers on the label to identify the position number with the proper function. Strip the wire, leaving approximately 1/4" (6 mm) of bare wire exposed. Insert the wire into the terminal, and tighten.

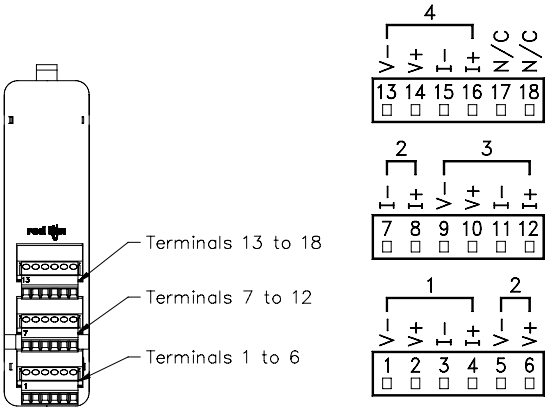

LEDS

STS – STATUS LED

The Status LED is a dual color LED that provides information regarding the state of the module. This includes indication of the various stages of the start-up routine (power-up), as well as any errors that may occur.

Startup Routine

Rapidly Flashing Red	Module is currently running the boot loader and/or being flash upgraded by Crimson. This occurs for four seconds during a power up.
Steady Red	Module switching to configuration.
Green	Module performing normally.

Error States

Solid Red	Module not controlling, and not communicating.
Green/Pulsing Red	Module is controlling properly, but has lost communication with the Master.

ALM – ALARM LED

The Alarm LED indicates the presence of a fault condition.

FIRMWARE UPGRADE

The module's firmware is stored in flash memory so that software/hardware conflicts are avoided, and so that software features may be added in the future.

During a download, Crimson compares its own library of firmware files with those stored in the Master module. If they do not match, Crimson will download the necessary files. The Master then checks to make sure that the I/O modules contain the same firmware. If they contain a different revision, the Master will automatically copy those files into the module's flash memory. During this process, the module LEDs will flash rapidly, starting with the top row, and progressing through the remaining rows until the process is complete.

CONFIGURATION

Programming is done via Crimson, a Windows® compatible configuration interface. Please see the Crimson manual for more information.

ORDERING INFORMATION

TYPE	MODEL NO.	DESCRIPTION	PART NUMBER
Master Module	CSMSTR	Modular Controller Master, Multi Comms ports and Ethernet	CSMSTRV2
		Modular Controller Master with multiple protocol converter, data logger, web server with Virtual HMI up to QVGA (320 x 240) size and expansion slot.	CSMSTRSX
		Modular Controller Master with multiple protocol converter, data logger, web server with Virtual HMI up to VGA (640 x 480) size and expansion slot with increased SDRAM	CSMSTRGT
Analog Output Module	CSOUT[1]	4-Channel Analog Output Module	CSOUT400
Communication Cables (10 feet)	CBL	Programming Cable for CS, G3, & Paradigm Series	CBLPROG0
		Communications Cables[1]	CBLxxxxx
Software		Crimson Programming Software[2]	SFCRM
		Crimson Programming Software, Manual, and Download Cable	SFCRK
Accessories		Rail Stops (Qty 2)	RSRSTP00
		Replacement Base	CSBASE00
		Replacement Termination Plug	CSTERM00

[1] Visit www.redlion.net for a complete list of PID modules, data acquisition modules, communications drivers and cables.

[2] Free at www.redlion.net

LIMITED WARRANTY

The Company warrants the products it manufactures against defects in materials and workmanship for a period limited to two years from the date of shipment, provided the products have been stored, handled, installed, and used under proper conditions. The Company's liability under this limited warranty shall extend only to the repair or replacement of a defective product, at The Company's option. The Company disclaims all liability for any affirmation, promise or representation with respect to the products.

The customer agrees to hold Red Lion Controls harmless from, defend, and indemnify RLC against damages, claims, and expenses arising out of subsequent sales of RLC products or products containing components manufactured by RLC and based upon personal injuries, deaths, property damage, lost profits, and other matters which Buyer, its employees, or sub-contractors are or may be to any extent liable, including without limitation penalties imposed by the Consumer Product Safety Act (P.L. 92-573) and liability imposed upon any person pursuant to the Magnuson-Moss Warranty Act (P.L. 93-637), as now in effect or as amended hereafter.

No warranties expressed or implied are created with respect to The Company's products except those expressly contained herein. The Customer acknowledges the disclaimers and limitations contained herein and relies on no other warranties or affirmations.

Red Lion Controls
20 Willow Springs Circle
York PA 17406
Tel +1 (717) 767-6511
Fax +1 (717) 764-0839

Red Lion Controls BV
Printerweg 10
NL - 3821 AD Amersfoort
Tel +31 (0) 334 723 225
Fax +31 (0) 334 893 793

Red Lion Controls AP
31, Kaki Bukit Road 3,
#06-04/05 TechLink
Singapore 417818
Tel +65 6744-6613
Fax +65 6743-3360